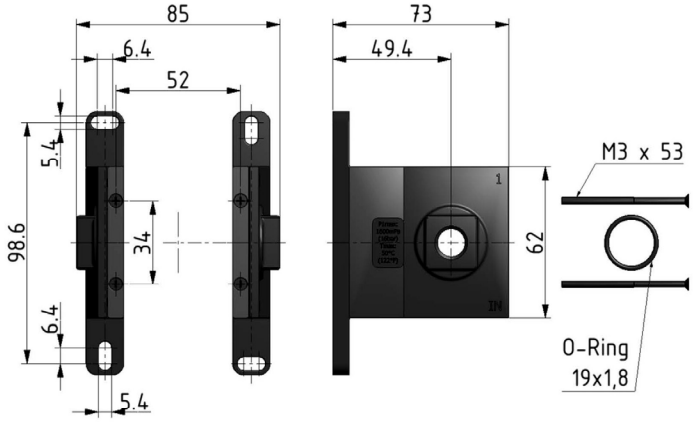

series	series	weight
Futura	BG1	0.447 kg

technical data

- **description:** coupling kit wall mounting
- **fixing:** wall mounting with thread (Futura BG1)
- **material coupling kit:** die-cast zinc
- **material srews:** steel
- **material o-ring:** NBR 70